# Catalogue

Light Steel Framing

FERMAC

Fermac LSF's extensive knowledge and experience in the manufacture and supply of steel structures guarantee unsurpassed precision and quality. We are dedicated to using and developing cutting-edge technologies, state-of-the-art processes and systems to ensure that we remain at the forefront of this segment of the industry.

At Fermac LSF we select the best and largest steel mills as suppliers. Only the best raw materials guarantee products of exceptional quality, ultimately, those who benefit from the quality of our raw materials are our customers.

Building on LSF is promoting sustainability. The materials used are recyclable or eco-efficient. In addition, there is a significant reduction in CO2 emissions in the manufacture and assembly of the materials used, compared to the traditional method.

**At Fermac LSF We Help Build the Future Responsibly.**

At Fermac LSF, we are committed to sustainable construction methods. Our "light steel" profiles not only provide exceptional strength and durability, but also contribute to a greener planet.

## "C" Profile

Cold-formed galvanized steel structural profiles of C-section, i.e. profiles with composite flaps, with four edges. These profiles are usually used on interior and exterior walls, in the execution of ceilings, roof trusses, slabs and balconies. They are manufactured in top quality sheet metal meeting or exceeding all European standards.
Steel grade: S280 GD | UNE EN-10346
Galvanized Coating: Z275 or ZM 140 Zinc magnesium
Tolerance: EN 10143:2006
StandardLengths: 3,000, 6,000 and 12,000 mm (Other lengths on request).

| REF: | DESCRIPTION | THICKNESS | WEIGHT/MT | MEASURES |
|---|---|---|---|---|
| LSF02 | C90 Profile | 1.5MM | 2,426kg | 90X43X15 |
| LSF04 | Profile C150 | 1.5MM | 3,132kg | 150X43X15 |
| LSF06 | C200 Profile | 2MM | 4,961kg | 200X43X15 |
| LSF08 | C250 Profile | 2.5MM | 7,183kg | 250X43X15 |

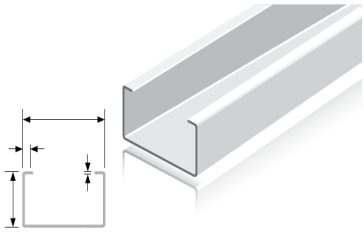

## "U" Profile

Cold-formed galvanized steel structural profiles with U-section, i.e. single-flapped profiles with two edges. They are usually referred to as "U"s, channels or lanes. They are manufactured in top quality sheet metal meeting or exceeding all European standards.
Steel grade: S280 GD | UNE EN-10346
Galvanized Coating: Z275 or ZM 140 Zinc magnesium
Tolerance: EN 10143:2006
StandardLengths: 3,000, 6,000 and 12,000 mm (Other lengths on request).

| REF: | DESCRIPTION | THICKNESS | WEIGHT/MT | MEASURES |
|---|---|---|---|---|
| LSF01 | U93 Profile | 1.5MM | 2,108kg | 43X93 |
| LSF03 | U153 Profile | 1.5MM | 2,814kg | 43X153 |
| LSF05 | U204 Profile | 2MM | 4,533kg | 43X204 |
| LSF07 | U255 Profile | 2.5MM | 6,692kg | 43X255 |

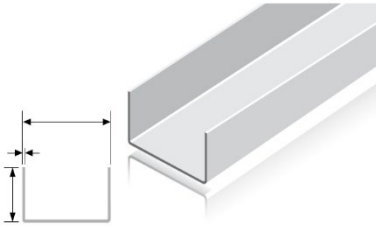

## Angles / Tape

Cold-formed galvanized steel structural profiles serve to reinforce certain connections or to interconnect several parallel parts L-shaped pieces are used, that is, a sheet bent on a single edge, usually with flaps of equal dimensions They are manufactured in top quality sheet meeting or exceeding all European standards.
Steel grade: S280 GD | UNE EN-10346
Galvanized Coating: Z275 or ZM 140 Zinc magnesium
Tolerance: EN 10143:2006
StandardLengths: 3,000mm (Other lengths on request).

| REF: | DESCRIPTION | THICKNESS | WEIGHT/MT | MEASURES |
|---|---|---|---|---|
| LSF09 | L 50x50 | 1.5MM | 1,178kg | 50X50 |
| LSF10 | L 100x100 | 1.5MM | 2,356kg | 100X100 |
| LSF11 | Tape 100 | 1.5MM | 1,178kg | 100 |

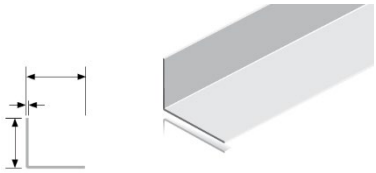

## MAG+ Boards

MAG+ panels are an innovative panel of high performance, with numerous applications in the construction and rehabilitation of light steel, partitions, false ceilings, floors, wall cladding, facades and roofs.
It is an alternative solution to plasterboard, OSB and cementitious boards in the coating of exterior walls, due to the thermal, acoustic and high durability characteristics, the Heavy Duty reference has the particularity of being a board with a structural purpose, thus being an excellent alternative to OSB board.

| REF: | DESCRIPTION | THICKNESS | MEASURE |
|---|---|---|---|
| PLA03 | MAG+ Mgo 12mm | 12mm | 1200x2400mm |
| PLA04 | MAG+ Mgo FIRE 9mm | 9mm | 1200x2400mm |
| PLA07 | MAG+ Mgo Heavy Duty 12mm | 12mm | 1200x2400mm |
| PLA08 | MAG+ Mgo Heavy Duty 18mm | 18mm | 1200x2400mm |

(Other measurements and references available.)

## OSB Boards

OSB boards serve to coat and reinforce the structure. These structural plates are composed of oriented wooden sheets. Hence the name: OSB - Oriented Strand Board. They are an agglomerate of long, oriented wood particles, with characteristics similar to those of the so-called glued laminated timber structural systems.

| REF | DESCRIPTION | THICKNESS | MEASURE |
|---|---|---|---|
| PLA09 | OSB-3 12MM | 12mm | 2500X1250X12MM |
| PLA10 | OSB-3 18MM | 18mm | 2500X1250X18MM |
| PLA11 | OSB-3 18MM M/F | 18mm | 2500X1250X18MM |
| PLA12 | OSB-3 15MM | 15mm | 2500X1250X15MM |
| PLA13 | OSB-3 22MM | 22mm | 2500X1250X22MM |

(Other measurements and references available.)

## Screws and fixings

All parts of the LSF metal structure are interconnected by means of galvanized, self-drilling and self-tapping steel screws. The mechanical strength, galvanization and durability of these screws must be ensured.

| REF: | DESCRIPTION | MEASURES | UN./CX |
|---|---|---|---|
| ACE01 | SC2 Screw | 4.2X30MM | 1000 |
| ACE02 | SL4 Bolt | 4.8X16MM | 1000 |
| ACE03 | SD6 Bolt | 5.5X22MM | 500 |
| ACE04 | SD14 Screw | 5.5X34MM | 500 |
| ACE05 | SD6 Bolt | 5.5X38MM | 500 |
| ACE06 | SW3 Screw | 6.5X50MM | 250 |
| ACE07 | SC5 Bolt | 5.5X38MM | 1000 |
| ACE08 | SD6 Bolt | 5.5X65MM | 250 |
| ACE09 | Key for SL4 | N.A. | 1 |

(Other measurements and references available.)

## TYPICAL LSF INSTALLATIONS DETAILS

Construction examples used in the LSF system.

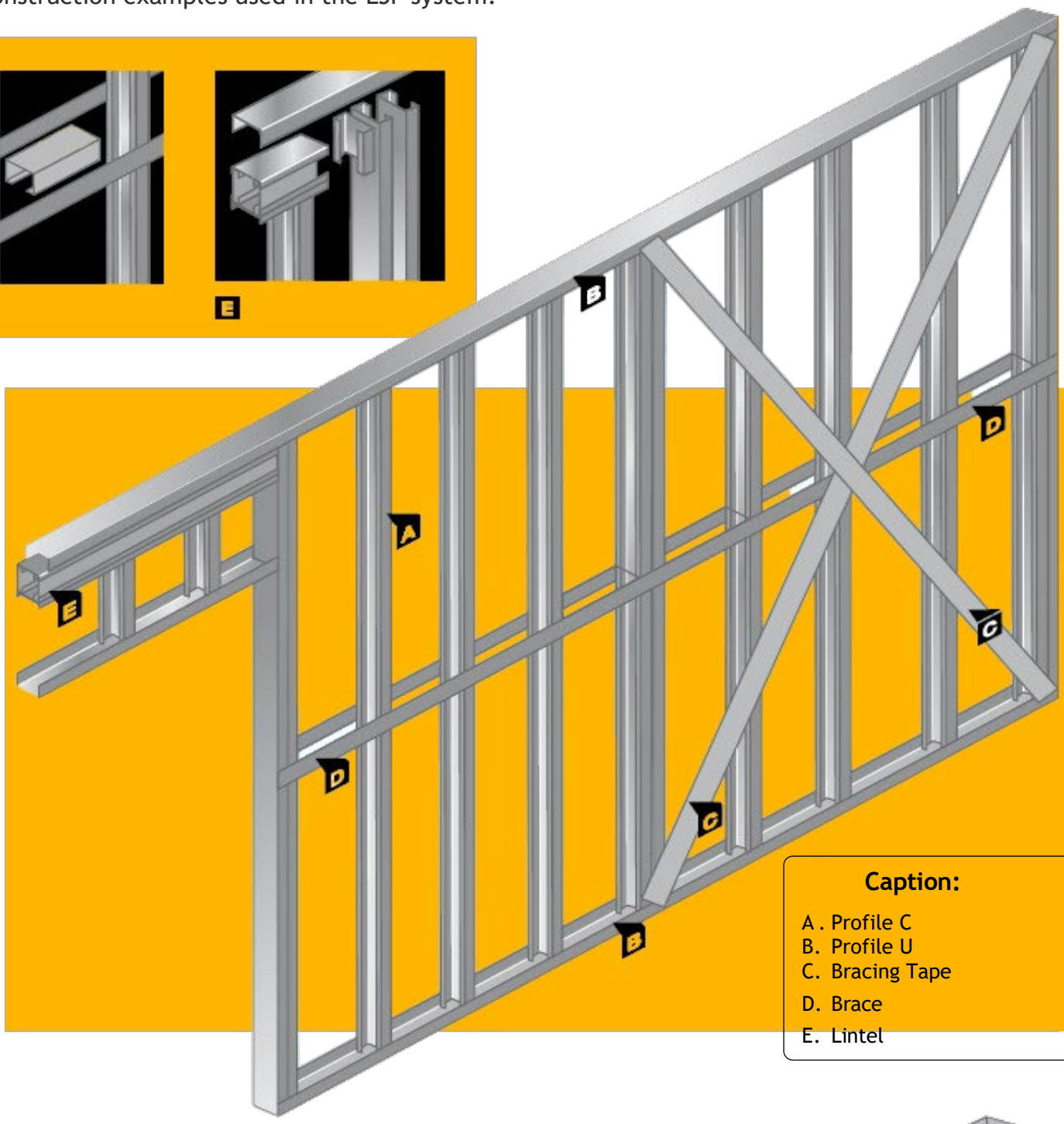


**Caption:**

A . Profile C
B. Profile U
C. Bracing Tape
D. Brace
E. Lintel

### DETAIL REINFORCEMENT AND BLOCKING:

It is necessary to make allowances within any LSF system for building movement. The design can provide a variety of details and components, including a reinforcement and locking detail and an eave detail to carry the LSF system.

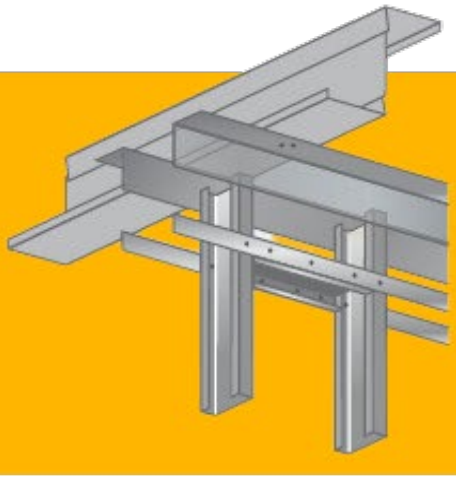

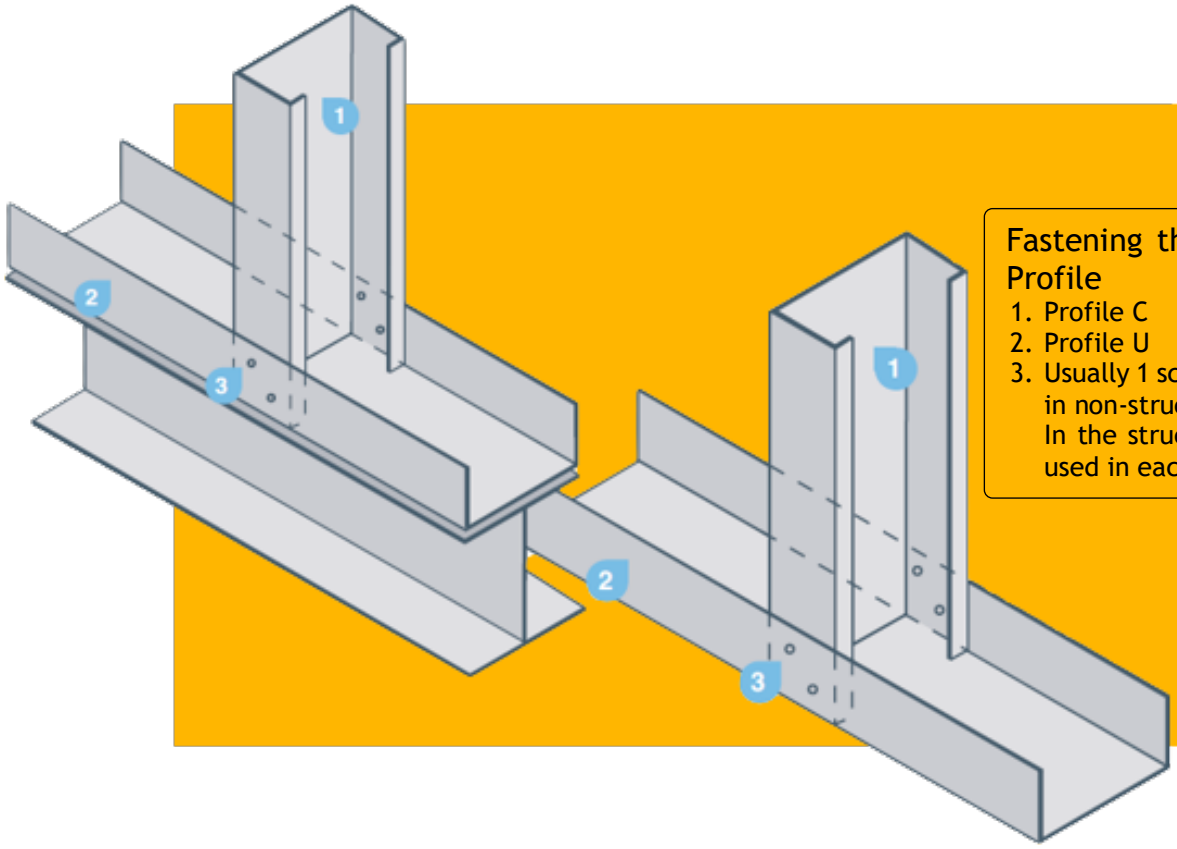


## Fastening the U Profile to the C Profile

1. Profile C
2. Profile U
3. Usually 1 screw is used on each flange in non-structural walls
   In the structural walls, 2 screws are used in each flange of the profile.

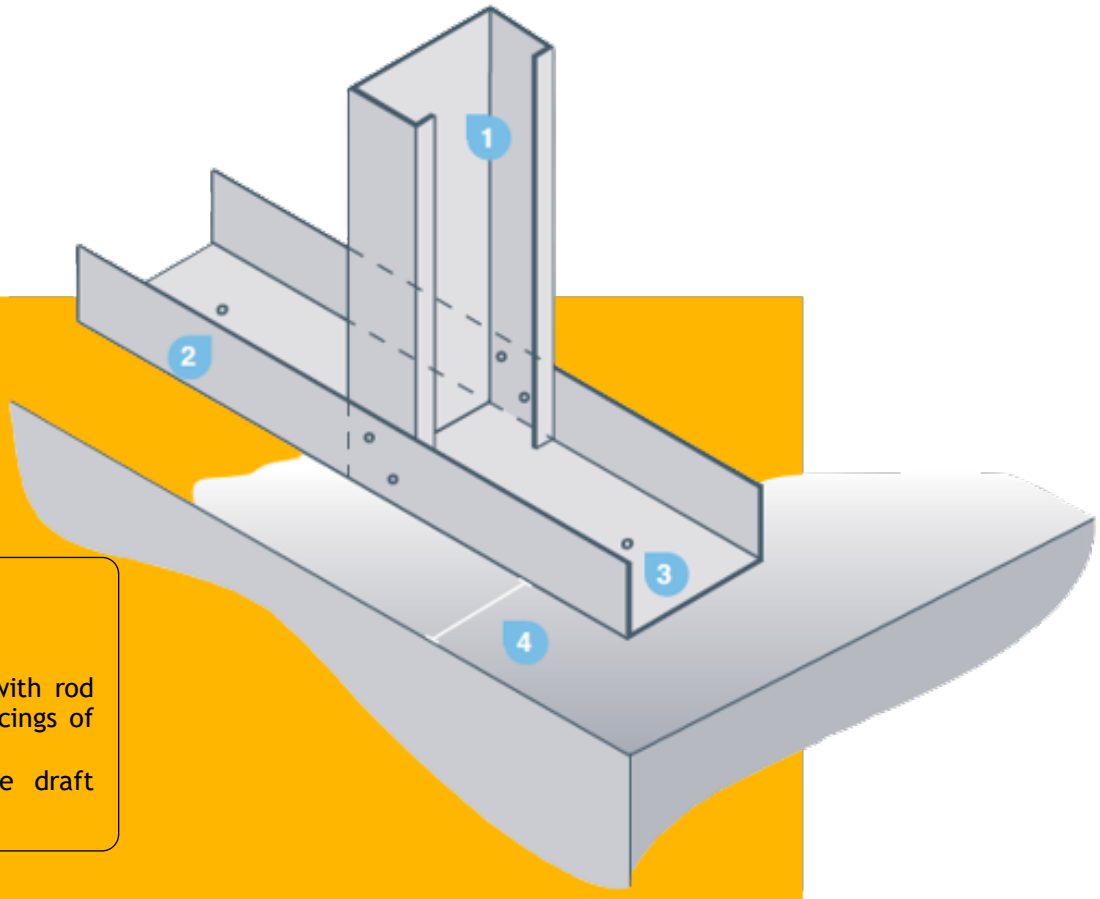


## LSF Fastening to the Slab

1. Profile C
2. Profile U
3. Fixing to the slab is done with rod and chemical anchor in spacings of 600mm-1200mm
4. Spacing referred to in the draft execution

## Lintel LSF

1. Short section - refer to the project for the number of bolts
2. Equal to the depth of the back-to-back profiles on the lintel
3. C-sections should be cut to the flange depth of the short section
4. Added fixings after the lintel is positioned over the short section
5. Profile U
6. U profile (can be omitted in the technical drawing)
7. Opposing C Profiles

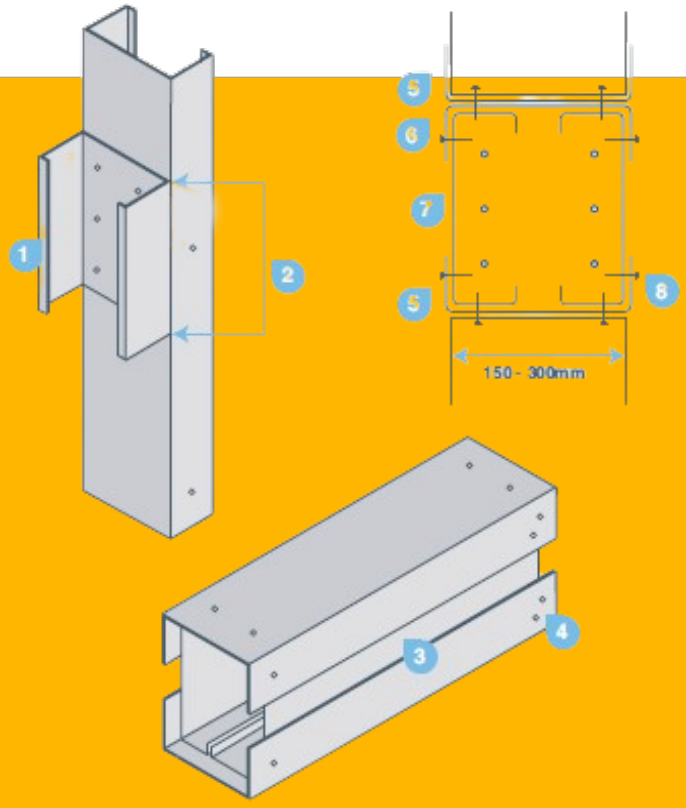


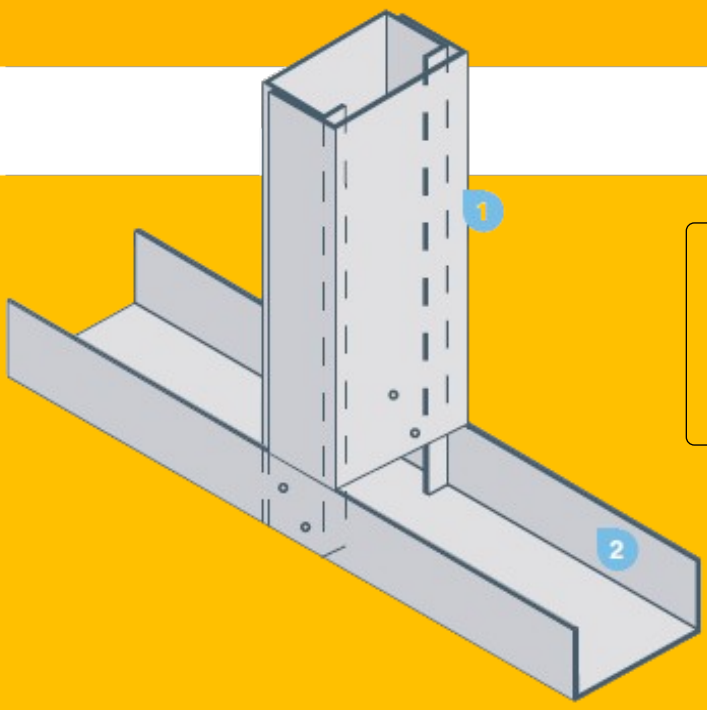


## Composite Beam/Column

1. Composite beam section, a U profile is used to reinforce the existing C profile, bolted between them.

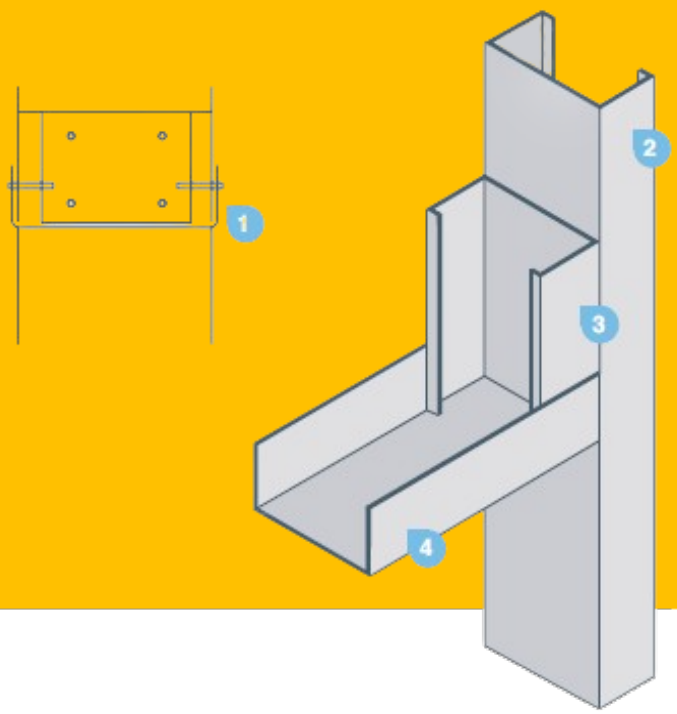


## Lintel - Shoulder pad

1. Profile U
2. Total height of the jamb
3. Minimum section of 150 mm fixed with 4 screws
4. U profile fixed with 2 screws on the flange to the C profile

FERMAC

Estrada Nacional 356
2440-017 Batalha
(+351) 244 096 123
geral@fermac.pt